QUEEN'S UNIVERSITY BELFAST

MAXCMAS project: Autonomous COLREGs compliant ship navigation

Varas, J. M., Hirdaris, S., Smith, R., Scialla, P., Caharija, W., Bhuiyan, Z., Mills, T., Naeem, W., Hu, L., Renton, I., Motson, D., & Rajabally, E. (2017). MAXCMAS project: Autonomous COLREGs compliant ship navigation. In *Proceedings of the 16th Conference on Computer Applications and Information Technology in the Maritime Industries (COMPIT) 2017* (pp. 454-464)

Published in:
Proceedings of the 16th Conference on Computer Applications and Information Technology in the Maritime Industries (COMPIT) 2017

Document Version:
Peer reviewed version

Queen's University Belfast - Research Portal:
Link to publication record in Queen's University Belfast Research Portal

Publisher rights
© 2017 COMPIT. This work is made available online in accordance with the publisher's policies. Please refer to any applicable terms of use of the publisher

General rights
Copyright for the publications made accessible via the Queen's University Belfast Research Portal is retained by the author(s) and / or other copyright owners and it is a condition of accessing these publications that users recognise and abide by the legal requirements associated with these rights.

Take down policy
The Research Portal is Queen's institutional repository that provides access to Queen's research output. Every effort has been made to ensure that content in the Research Portal does not infringe any person's rights, or applicable UK laws. If you discover content in the Research Portal that you believe breaches copyright or violates any law, please contact openaccess@qub.ac.uk.

Open Access
This research has been made openly available by Queen's academics and its Open Research team. We would love to hear how access to this research benefits you. – Share your feedback with us: http://go.qub.ac.uk/oa-feedback

Download date:25. Apr. 2024

MAXCMAS project. Autonomous COLREGs compliant ship navigation

Jesus Mediavilla Varas, Spyros Hirdaris, Renny Smith, Paolo Scialla, Walter Caharija Lloyd's Register, Southampton (UK), jesus.mediavillavaras@lr.org
Zakirul Bhuiyan, Terry Mills Southampton Solent University's Warsash Maritime Academy, Warsash (UK), zakirul.bhuiyan@solent.ac.uk
Wasif Naeem, Liang Hu Queen's University Belfast, Belfast (UK), w.naeem@qub.ac.uk
Ian Renton, David Motson Atlas Elektronik UK, Winfrith Newburgh (UK), ian.renton@uk.atlas-elektronik.com
Eshan Rajabally Rolls Royce, Derby (UK), eshan.rajabally@rolls-royce.com

Abstract

This paper discusses the concept and results of the MAXCMAS project, an approach to COLREGs [1] compliance for autonomous ship navigation. In addition to desktop testing, the system is being implemented and tested thoroughly on networked bridge simulators as well as on an unmanned surface vessel. Both bridge simulation-based and desktop-based results exhibit suitable collision avoidance actions in a one-on-one and multivessel ship encounters respectively. The eventual aim of the project is to demonstrate an advanced autonomous ship navigation concept and bring it to a higher technology readiness level, closer to market.

1. Introduction

The MAXCMAS ("MAchine eXecutable Collision regulations for Marine Autonomous Systems") project aims at developing a COLREGs compliant path planner for autonomous vessel guidance and control. COLREGs are the "rules of the road" which were defined by the IMO (International Maritime Organization), to prevent collisions between two or more vessels. A significant challenge, which is tackled in the project, is to translate the COLREGs, which were written for human consumption, into state of the art collision avoidance algorithms. MAXCMAS is a £1.27 million collaborative research project, with funding from InnovateUK. The project brings together key expertise of industrial partners: Rolls Royce (RR) as lead, Atlas Elektronik UK (AEUK) and Lloyd's Register (LR); and academic partners: Queen's University Belfast (QUB) and Southampton Solent University's Warsash Maritime Academy (WMA).

This paper follows on from the previous paper [2], presented at COMPIT2016, which described the approach and objectives of the MAXCMAS project. MAXCMAS started in mid-2015 and will be completed at the end of 2017. In the interim, much progress has been made, as summarized below, which is discussed in this paper.

- System requirements were derived earlier on to comply with COLREGs and good seamanship practices. Additional safety requirements were derived to mitigate possible hazards, such as sensor failure or malfunction.
- A system architecture was designed (see Fig. 1 for a highly simplified schematic). The sensors information is fused, providing a world picture; the autonomy executive and collision avoidance algorithms generate navigation demands (heading, speed) to a controller interface. Those were then translated to control demands (throttle and rudder) for the autonomous vessel. For this project, experimental testing of the algorithms is carried out on two platforms: an autonomous bridge simulator and the ARCIMS unmanned surface vessel (USV) from AEUK. This platform is an in-service military autonomous system primarily used for mine countermeasures.
- Key COLREGs rules and seamanship behaviours have been formalised and implemented in the QUB's collision avoidance module (CAM) (Section 2).
- The system has been integrated and made operational in the WMA networked bridge simulator environment (Section 3). Validation is done by simulating multiple potential

collision scenarios, to date: one-to-one and multi-vessel encounters, non-compliant behaviour of the target vessel and vessels with different degrees of manoeuvrability.

- Further demonstration and validation is being done via desktop simulations (Section 4): either Monte Carlo simulations, and by reproducing actual collisions incidents.
- System implementation and sea trials in the ARCIMS vessel is under way, with suitable sensors being identified and tested (Section 5).
- Assurance of the non-deterministic nature of the CAM is also discussed (Section 6).

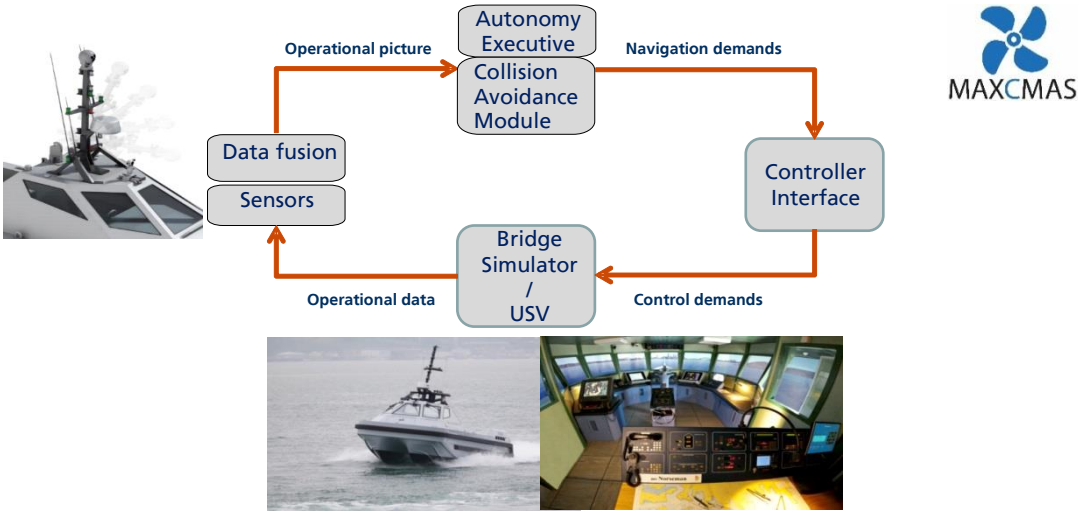

Fig. 1: MAXCMAS system architecture.

2. Path planning and collision avoidance

The collision avoidance module (CAM) software regularly evaluates collision risks with the surrounding ships and/or landmass and, if necessary, provides collision avoidance decisions and actions that can be executed by the autonomous vessel. In this paper, it is assumed that the USV equipped with CAM is the own ship (OS) whilst all other vessels around the OS are referred to as target ships (TGTs). As presented in Fig. 2, the CAM consists of an interface and four sub-modules: risk assessment, situational assessment, decision making and path re-planning. The 'map information' input defines any prohibited areas (restricted water space) which is then taken into consideration by the collision avoidance algorithm so that no path could be generated in those waters. The interface links CAM with the Autonomy Engine which consists of a mission planner and a track pilot among other functions. The Autonomy Engine provides CAM with all necessary data such as OS's and TGTs' parameters, mission waypoints and environmental data.

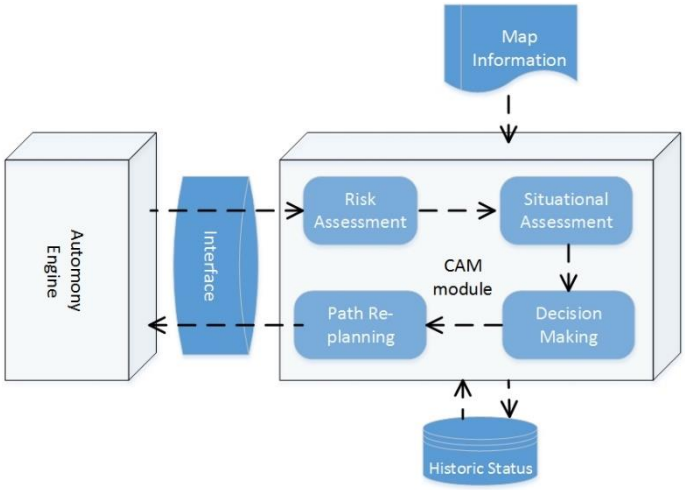

Figure 2 The system structure of the CAM.

Based on data provided to the CAM by the Autonomy Engine, if a target ship is present, the risk assessment submodule is activated which determines if there is a risk of collision with the target. To assess a risk of collision, the widely-used closest point of approach (CPA) method has been adopted [3]. However, the existing CPA method is not sufficient to determine whether a target vessel indeed complies with COLREGs or not. Indeed, without a proper assessment of the situation, the USV may continue to follow irrelevant COLREGs rules thus failing to make the required evasive manoeuvre in time. Hence, an extended risk assessment criterion has been developed to detect urgent risks of collisions caused by target vessels whose behaviours are not COLREGs-compliant.

The situational and risk assessments sub-modules work alongside each other to distinguish between COLREGs compliant and non-compliant targets. A criterion based on the historic status of a target ship is used. Once a collision risk is deemed to exist and the TGT is assessed as COLREGs-compliant, the next stage is to determine which COLREGs encounter, i.e., "head-on", "crossing" or "overtaking", should be applied. An alternate evasive path is then generated, if required. On the other hand, if a collision risk is caused by a non-compliant TGT, no specific encounter-related COLREG applies and the unbounded evasive behaviour of USV is directly activated. Note that *in extremis* caused by non-compliant behaviours of target vessels, the USV should avoid collision at all costs which may be required by the ordinary practice of seamanship, or by the special circumstances of the case admitted under COLREGs rule 2 on responsibility[1].

A variety of path planning techniques with consideration of COLREGs have been developed in recent years, such as artificial potential fields [4], velocity obstacle method [5], evolutionary algorithms [6], fuzzy logic [7] and heuristic A* method [8], to name a few. However, most, if not all, of the existing techniques do not scale well to multiple target ships and multiple COLREGs rules, and usually one objective is considered only when using these techniques. To fill such a gap, a multi-objective optimisation framework, based on particular swarm optimisation is developed for path re-planning, which is flexible and scalable to accommodate multiple target ships and objective functions [8]. Specifically, the risk of collision, smoothness and length of the path are considered as three typical objectives in this research. In addition, a novel and unified representation in the form of mathematical inequalities

[1] COLREGs rule 2: Responsibility.
(a) Nothing in these Rules shall exonerate any vessel, or the owner, master or crew thereof, from the consequences of any neglect to comply with these Rules or of the neglect of any precaution which may be required by the ordinary practice of seamen, or by the special circumstances of the case.
(b) In construing and complying with these Rules due regard shall be had to all dangers of navigation and collision and to any special circumstances, including the limitations of the vessels involved, which may make a departure from these Rules necessary to avoid immediate danger.

is proposed for COLREGs rules selection and other USV constraints, which is rather simple to incorporate in the multi-objective framework for path re-planning.

One of the simulation results of the collision avoidance system is presented in Figure 3. The scenario is depicted in Figure 3-left, where the OS encounters four TGTs in the surrounding. The imminent risk is due to TGT1 which is head-on to OS. However, any incorrect manoeuvre could potentially create another risk of collision with one of the other TGT vessels in the area. As depicted in the simulation result of Figure 3-right, having detected and confirmed a head-on collision risk with TGT1 (marked by red star), a manoeuver to starboard is planned in real time by the CAM. Since the CAM is designed to take multiple vessels into consideration when replanning a path, a desired CPA is maintained with all vessels in the vicinity. The overall path of the OS is thus collision free and in accordance with COLREGs.

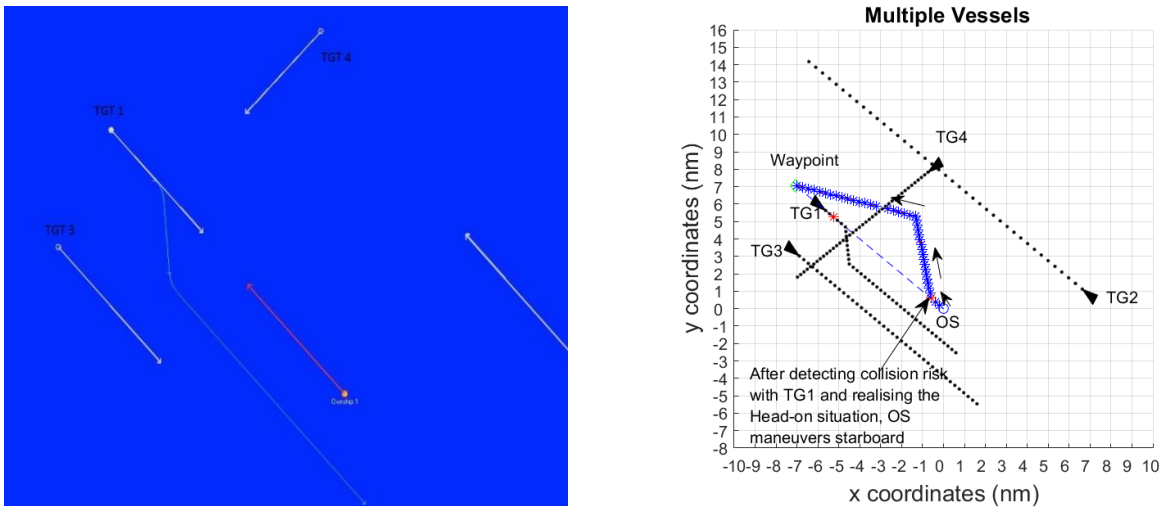

Figure 3 (left) Four-vessel encounter scenario; (right) the overall path.

In summary, the proposed CAM is able to determine the type of encounter in addition to determining whether a target ship complies with the COLREGs. The effectiveness of the proposed algorithm has been validated extensively through desktop simulations as well as on bridge simulators showing a range of difficulties encountered at sea.

3. Bridge simulator trials

The prime objective of bridge trials is to validate and refine the robust machine executable algorithms for ship navigation in accordance with the collision regulations (COLREGs) at sea. WMA's networked bridge simulators have been considered as a safe and effective test environment for this purpose.

Since COLREGs were written for human consumption, their machine interpretation is non-trivial. Within the MAXCMAS project scope, more than 100 system requirements have been developed using an 'equivalence' approach (an "alternative approach" that delivers the objective of a prescribed rule or regulation) of existing COLREGs in view of the primary focus on the safety of navigation. A number of challenges were identified while carrying out the validation of these requirements and some of the examples include:

- A variety and subjectivity of collision regulations and their wide range of applications during the different collision avoidance scenarios.
- To consider the man-in the-loop while running the scenarios in the bridge simulators where the interaction between manned ships and autonomous ships are needed.

- The operational difficulties such as encountering multiple ships, sea state and environmental conditions, situation assessment with degraded sensors (e.g. intermittent and/or problems with sensor uncertainty).

To address the above challenges, a variety of simulator-based scenarios with mariners' expertise were designed ranging from basic level single vessel encounters to more complex level multi-ship situations. These scenarios have been categorized into 5 levels, which are basic, intermediate, advanced, good seamanship and breakdown with sensor degradation.

The MAXCMAS system has been installed in one of the six WMA's conventional bridges and it includes the AEUK's ARCIMS autonomy executive, the QUB's CA algorithms and a RR's interface. This autonomous vessel (bridge simulator) is able to interact with one or more manned bridge simulators and other simulated target ships following predefined routes. During the scenario trials, the autonomous vessel uses the common sensors (e.g. Gyro, AIS, and GPS) and these driving sensors have initially tested the algorithms using ground truth positional information and later with artificially degraded positional information.

Bridge simulation trials at WMA is currently ongoing, therefore the authors have only highlighted their experiences during the first set of trials, where the different scenarios were designed for encounters between own-ship (the autonomously guided vessel) and one target ship (instructor controlled from simulator control room). These were all basic scenarios encountering head-on, crossing and overtaking with different permutations (total 36 trials). Some of the examples of scenarios were:

- Head on
- Crossing with own-ship stand-on
- Crossing with own-ship give-way
- Target overtaking own-ship
- Own-ship overtaking target
- Target ship diverts to starboard
- Target ship diverts to port
- Target ship maintains course
- Target vessel adopts non-compliant heading
- Target vessel adopts non-compliant speed
- Good sensor picture
- Poor sensor picture

Subjective and objective assessment criteria have been developed for each scenario. The subjective criteria are based on performance, while the objective criteria are based on weighted scoring of CPA/TCPA, variables and track parameters. The objective of such combined assessment methodology is to allow the structured evaluation of simulator recorded scenario performances against the benchmark criteria and scores. Examples of subjective assessment are given below:

- Acquire targets/objects within detectable range
- Ascertain risk of collision
- Select appropriate 'Rules of the Road'
- Action to 'comply with COLREGS'
- Substantial action (if in doubt the assessor will note the amount of alterations of course and/or speed)
- Early action (if in doubt the assessor will note the time)
- Does not result in close quarters with another vessel
- Maintain safe CPA/TCPA
- Return to planned track

Non-compliance with any one of the above assessment criteria does not indicate failure of the MAXCMAS ship autonomous system. However, failure to rectify any non-compliant grading on

subsequent experiments is benchmarked as failure of the MAXCMAS system.

During the first trials, amendments and improvements were made to the CAM algorithms. It was clear that the CAM software responded correctly to standard situations where the target vessel stood on or gave way correctly. An example scenario is given in Figure 4, showing a 'head-on' situation to demonstrate safe navigation and collision avoidance maneuvering; where both target and own vessels are expected to deviate appropriately as the give way vessels and later the own-vessel will return to the planned track in an expeditious manner. In this particular scenario, the Closest Point of Approach (CPA) was set to 2 nautical miles and Time of Closest Point of Approach (TCPA) to 12 mins. It is shown that the MAXCMAS ship did correctly assess the 'head-on' situation with the target and generated a sub-waypoint to starboard.

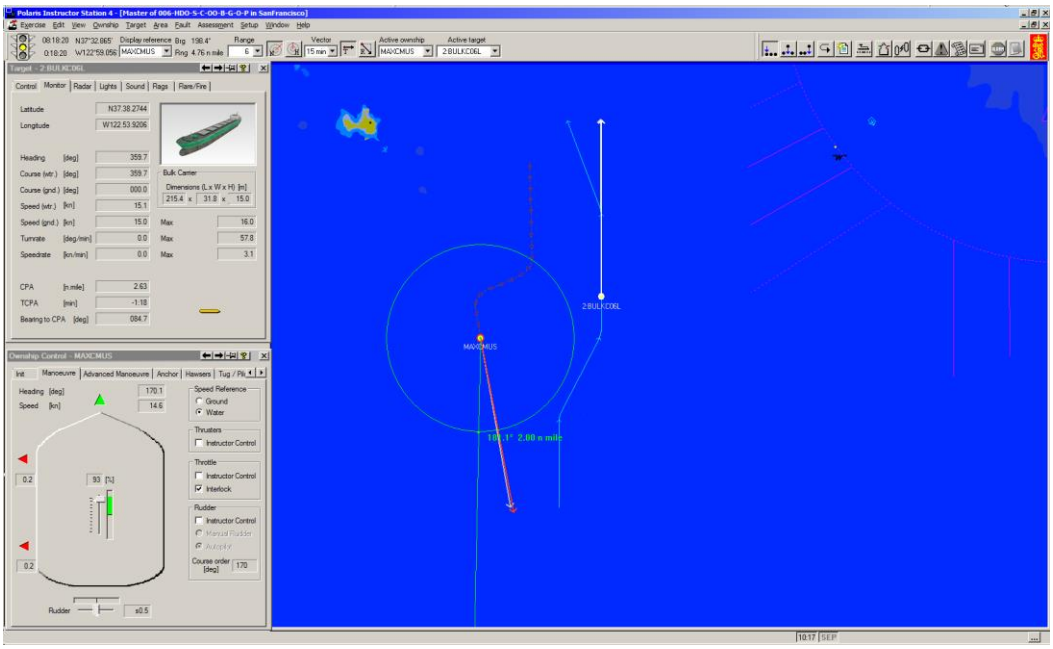

Figure 4: Example scenario showing 'head-on' situation of MAXCMAS autonomous vessel (OS) with a target vessel (TGT), with red and white arrows respectively.

After the first series of trials, further development took place in the CAM, such as distinguishing COLREG compliant and non-compliant targets and a subsequent mitigating alteration of course to counter such non-compliant targets. Once these changes were introduced, the own-ship has successfully met the assessment criteria when encountering non-compliant vessels in the one-on-one trials listed above.

A number of scenarios have been planned for bridge simulation such as handling COLREG conflicts in multi-vessel encounters, differing environmental conditions and congested waters including traffic separation schemes. Resource allowing, scenarios with interaction between manned and bridge simulators and MAXCMAS will also be investigated.

4. Desktop simulations: stress testing and historical cases

In addition to the desktop simulations performed in Section 2, aimed at developing and testing the CAM, additional desktop simulations are being conducted: i) Monte Carlo simulations are done to stress test the CAM, and hence detect any weaknesses; ii) simulations of historical collision incidents are done to demonstrate the performance of the CAM in more realistic scenarios and gain further confidence.

<u>Monte Carlo simulations</u>

The aim of ODIN[2] Monte Carlo simulation testing is to evaluate one-on-one encounters between a simulated USV, directed by the autonomy and Collision Avoidance Module (CAM), and a simulated target vessel that behaves as a manned vessel. Through variation of scenario parameters and target platform behaviour the testing will try and expose weaknesses that would otherwise be difficult to detect in real-time simulations. The Monte Carlo approach allows the testing of a large number of permutations of each scenario, potentially allowing it to find "edge cases" in the algorithm (cases where one or more parameters are at one of their limits, and the algorithm does not respond as expected) that would be missed during other testing.

The six vignettes that are to be exercised in the sea trials (Section 5), i.e. passing a fixed object, overtaking a moving vessel, being overtaken by a moving vessel, vessel crossing from port, vessel crossing from starboard, vessel approaching head on; are modelled in the ODIN entity-based modelling tool. Two examples of the vignettes tested are shown in Figure 5. The simulations executed allow selected parameters to be varied to quantitatively evaluate the performance of the CAM. For each variation of a given vignette, one variable is changed at a time. The variables that are changed include detection range, speed of target vessel, angle of approach of target vessel, and target vessel behaviour. The target vessel behaviour can be changed to assess the outcome when it behaves in a manner compliant with COLREGs as well as when it acts in a non-compliant manner. Where weaknesses are identified changes to the CAM can be implemented.

An interface has been created that allows evaluation of autonomous behaviour and collision avoidance within the ODIN software, either as a real-time simulation or as a statistical model using the Monte Carlo method. More complex scenarios could be developed to increase the stress with which the autonomy behaviours are evaluated. Re-testing of unsuccessful scenarios may also be carried out to re-evaluate updates that have been implemented.

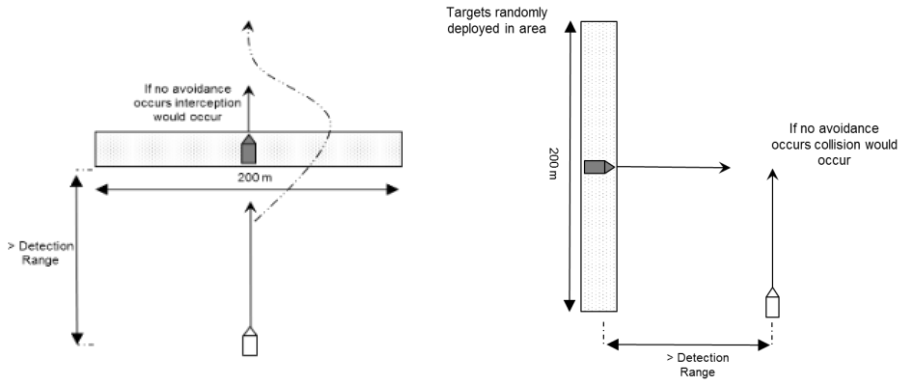

Figure 5 (left) Vignettes illustrating an overtaking; (right) crossing scenario.

<u>Simulations of historical collision incidents</u>

Historical multi-vessel collision accidents have been selected and are being simulated using the CAM software on a desktop environment. The simulations aim at illustrating how MAXCMAS enabled autonomous ships would behave in realistic situations, albeit with the limitations of a desktop. Hence environmental conditions, communications among vessels, and other real factors that played a role in the accident are omitted. For simplicity it's assumed that all the vessels are autonomous, MAXCMAS enabled. This is a major simplification, which may never happen in the foreseeable future; it's expected than autonomous and conventional ships will coexist. Interaction between manned and autonomous vessels is not possible and it's also not the objective of these simulations, which will be

[2] ODIN is a complete underwater warfare software simulation tool, property of Atlas Elektronik UK. https://www.atlas-elektronik.com/what-we-do/submarine-systems/odin/

tackled with the networked bridge simulations and the sea trials. Despite of these limitations, desktop simulations of historical cases add great value, complementing the other desktop and bridge simulations (Sections 2 and 3), and the sea-trials (Section 4); giving confidence of the validity of our approach to autonomous navigation.

The historical collision incidents that are being considered were caused by human error (like in most cases [9]), namely lack of situational awareness and failure to comply with the COLREGs; often with dire consequences, in terms of loss of life, damage and/or environmental impact. In the simulations, vessel characteristics and initial conditions (position, speed, and bearing) are replicated from the actual encounters, to make them as realistic as possible. Figure 6 illustrates one of the collision scenarios considered, where two vessels A and B collided in a highly congested coastal area. At the time of the collision, Vessel B was run over by Vessel A, causing the hull of Vessel B to break and thereby sinking the vessel within a matter of minutes. All of the crew in Vessel B went missing, and there was a large oil spillage. Vessel A sustained damage in the bow section including ruptures leading to flooding, but no casualties to her crew. Visibility was good weather conditions were not an issue. Post-mortem analysis revealed that Vessel A did not keep proper lookout, infringing rule 5 [3], and neither of the two vessels significantly alteration course and or speed to avoid collision, infringing rule 8 [4].

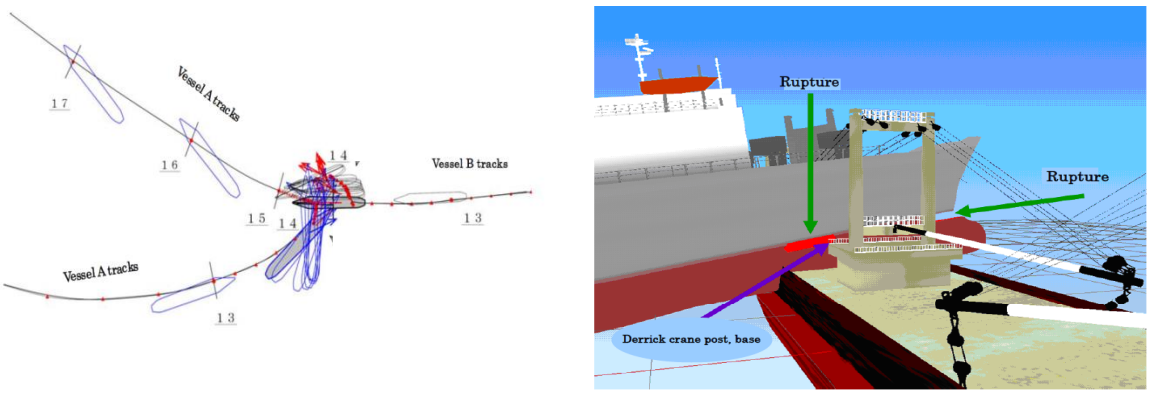

Figure 6 (left) actual trajectories of vessels A and B before and after collision; (right) image showing vessel A breaking the hull of vessel B.

At the moment of the writing, simulation work is underway which will illustrate how MAXCMAS autonomous vessels would have behave in nearly the same situation, demonstrating COLREGs compliance and seamanship, and thus avoiding collision, albeit with the simplifications earlier mentioned. The simulations adopt the same planned route and the same initial speed and bearing as in the actual collision, until a risk threshold is reached; at which point the CAM triggers a collision avoiding action, to finally returning to the original route.

5. USV sea trials

The aim of the sea trials is to exercise the Collision Avoidance Module (CAM) in a real environment under true platform motion, sensor performance and environmental conditions. One goal from this type of testing is to validate the results observed in simulated testing and gain an understanding of the differences between real and synthetic trials. A further goal is to assert the performance of the CAM or expose any additional weaknesses that have not been observed in other testing that will be fed in to algorithm refinement.

Since one of the primary goals of the sea trials is to validate testing already conducted in simulation,

[3] COLREGs rule 5: Lookout.
Every vessel shall at all times maintain a proper look-out by sight and hearing as well as by all available means appropriate in the prevailing circumstances and conditions so as to make a full appraisal of the situation and of the risk of collision.
[4] COLREGS rule 8: Action to avoid collision.

the test scenarios that will be exercised will replicate scenarios tested during the bridge simulation trials (Section 3) as well as the Monte Carlo stress testing (Section 4). This involves execution of six vignettes involving one-on-one encounters between the autonomous USV and a target vessel or obstacle. The six vignettes to be executed are as follows: passing a fixed object, overtaking a moving vessel, being overtaken by a moving vessel, vessel crossing from port, vessel crossing from starboard, vessel approaching head on.

Initially the target vessel will be virtual and is presented as having been detected with perfect sensor data. This approach allows the motion and manoeuvring of the USV to be the first factor to be considered when compared against entirely synthetics trials results. Following testing against a synthetic target a real target will be introduced. The real target will be a channel marker, for avoidance of a fixed obstacle, and then a RIB (rigid inflatable boat) fitted with a radar reflector for a moving target.

Preparatory work has been undertaken to evaluate a range of object detection sensors (radar, electro-optical camera, PTZ camera, AIS, etc.) system that will be fitted to the ARCIMS USV and used to provide target data to the CAM. The sea trials using the CAM will be conducted later in year. Figure 7 shows the ARCIMS vessel, the sea-trial controlled environment, and an example of one of the EO sensors that the vessels will be equipped with.

Figure 7 (top-left) ARCIMS USV; (top-right) sea-trial controlled environment (Bincleaves, UK); (bottom-left) Electro Optical camera; and (bottom-right) EO image.

6. Assurance and non-deterministic behaviour

A functional failure analysis (FFA) was carried out to identify possible hazards, risks and mitigations measures. Examples of hazards are: failure or malfunction (e.g. intermittence) of sensors, incorrect data fusion, communication problems between the CAM and the autonomy engine, high data latency, etc. Based on the outcome of the FFA, safety requirements were derived and imposed to the system. For example, the system shall provide notification of sensor failure, or hardware failure to a human operator. Suitable verification methods have been proposed, to demonstrate that safety requirements are met, either during simulations or the sea trials.

In addition to the safety requirements, another important aspect is the assurance of the CAM software. This is not straightforward, since the CAM, which is based on a swarm optimisation algorithm (Section 2), is non-deterministic. That means the solutions it generates (the subway points) are not the same, for a given input. It's worth noting that the assessment of risk, choice of COLREGs rule and down-selection of safe navigable space are all deterministic; although the specific path is not. Software assurance is traditionally done based on standards that have been developed for deterministic behaviour; and assurance of non-deterministic software (including machine learning) is a new area of research. As part of the MAXCMAS assurance work, the project is investigating the relevant standards across different industries (e.g. aviation, railway, etc.), as well the work being done in academia. Some standards that have been identified are: IEC 61508 "Functional safety of electrical/electronic/programmable electronic safety-related systems"; ISO 26262:2011 "Road vehicles - Functional safety"; RTCA DO-178C "Software Considerations in Airborne Systems and Equipment Certification", MIL-STD-882E "U.S. Department of Defence Standard Practice-System Safety". Regarding the state of the art, a promising novel method to assure non-deterministic software consists in creating a policing function [10], which sets the boundaries of operation of the non-deterministic behaviour. The advantage of such an approach is that the policing function can be assured using existing standards. Work is in progress, to identify the degree of non-deterministic behaviour of the CAM software, the applicability of these standards and the policing function, the knowledge gaps and what further work would be required.

Conclusions and future work

Since the last paper presented at COMPIT2016, much progress has been made in the MAXCMAS project. A considerable amount of effort has been dedicated to deriving appropriate functional and safety requirements to ensure COLREGs compliant behaviour, which has been implemented in the CAM. The system architecture, with the CAM, has been seamlessly integrated in a bridge simulator environment. The system is being thoroughly tested under a multitude of scenarios using desktop and bridge simulators, to demonstrate its robustness, and prove that the different requirements are met. The WMA bridge simulators have provided a unique platform to help develop and test the MAXCMAS autonomous vessel, in a near real environment, with one-to-one and multi-vessel encounters and different types of vessels. Desktop simulations have proven to be quite useful, to complement the bridge simulations in an inexpensive and fast manner.

Future work will deal with: conflicting rules, interaction of autonomous and manned vessels, poor or degraded sensor picture, manoeuvring in restricted waters. Preparations are underway to test the system at sea using the ARCIMS USV in a controlled environment, with virtual and real targets, using a range of advanced sensors. The MAXCMAS project is in fact bringing up an advanced autonomous ship navigation concept closer to commercialization.

Acknowledgments

We would like to thank all the MAXCMAS partners: Atlas Elektronik UK, Queen's University Belfast, Rolls Royce, Southampton Solent University's Warsash Maritime Academy and Lloyd's Register, for their input, and great contributions to the project. This project would have not been possible without the support of InnovateUK, under grant number 50121-378137, which is greatly acknowledged.

Bibliography

[1] IMO, «International Regulations for Preventing Collisions at Sea (COLREGs),» International Maritime Organization, 1972.

[2] J. Mediavilla Varas, W. Caharija, R. Smith, Z. Bhuiyan, W. Naeem, P. Carter et I. Renton, «Autonomous COLREGs Compliant Ship Navigation, Using Bridge Simulators

and an Unmanned Vessel,» Lecce (Italy), 2016.

[3] S. Campbell, M. Abu-Tair et W. Naeem, «An automatic COLREGs compliant obstacle avoidance system for an unmanned surface vehicle,» chez *Proceedings of the Institution of Mechanical Engineers*, 2014.

[4] W. Naeem, S. Campbell et L. Hu, «A reactive COLREGs-compliant navigation strategy for autonomous maritime navigation,» 2016.

[5] Y. Kuwata, M. T. Wolf, D. Zarzhitsky et T. L. Huntsberger, «Safe maritime autonomous navigation with COLREGS using velocity obstacles.,» *IEEE Journal of Oceanic Engineering*, vol. 39, pp. 110-119, 2014.

[6] R. Smierzchalski et Z. Michalewicz, «Modeling of ship trajectory in collision situations by an evolutionary algorithm,» *IEEE Transactions on Evolutionary Computation*, n° %14, pp. 227-241, 2000.

[7] K. SL. Kao, K. C. Lee et M. Ko, «A fuzzy logic method for collision avoidance in vessel traffic service,» *Journal of Navigation*, n° 160, pp. 17-31, 2007.

[8] L. Hu, W. Naeem, E. Rajabally, T. Mills et G. Watson, «COLREGs-compliant path planning for autonomous surface vehicles: a multi-objective optimization approach,» 2017.

[9] IMO, «Casualties statistics and investigations - Very serious and serious casualties for the 2001,» 2004.

[10] T. Wilkinson, M. Butler, M. Paxton et X. Waldron, «A Formal Approach to Multi-UAV Route Validation».

[11] S. Campbell, W. Naeem et . G. Irwin, «A review on improving the autonomy of unmanned surface vehicles through intelligent collision avoidance manoeuvres,» *Annual Reviews in Control*, n° 136, pp. 267-283, 2012.